MCOTS-B-600-31-HT
Single Output Half-brick

Military COTS DC-DC Bus Converters

440-700 V	31 V	32 A	4250 Vdc	Half-brick
Input	Output	Current	Isolation	DC-DC Converter

Full Operating Temperature Range is -55 °C to +100 °C

The MCOTS-B-600-31-HT bus converter is a next-generation, board-mountable, isolated, fixed switching frequency DC-DC converter that uses synchronous rectification to achieve extremely high conversion efficiency. The MCOTS series provides an isolated step down voltage from 540 V to 31 V intermediate bus with no regulation in a standard half-brick module. The MCOTS-B-600-31-HT converter is ideal for creating the mid-bus voltage required to drive standard 31 V DC-DC isolated converters.

MilCOTS™

Designed and manufactured in the USA.

Protection Features

- Input under-voltage and over voltage lockout protects against abnormal input voltages
- Output current limit and short circuit protection (auto recovery)
- Thermal shutdown

Control Features

- On/Off control referenced to input side
- Inherent current share (by droop method) for high current and parallel applications.
- Clock synchronization (primary referenced)

Specification Compliance

MCOTS series converters (with an MCOTS filter) are designed to meet:
- MIL-HDBK-704 (A-F)
- MIL-STD-461 (C, D, E, F)

Operational Features

- High efficiency, 94.9% at full rated load current
- Delivers 32 A full power with minimal derating
- Operating input voltage range: 440-700 V
- Fixed frequency switching provides predictable EMI
- No minimum load requirement

Screening/Qualification

- AS9100 and ISO 9001 certified facility
- Qualification consistent with MIL-STD-883
- Available with S-Grade or M-Grade screening
- Pre-cap inspection per IPC-A-610, Class III
- Temperature cycling per MIL-STD-883, Method 1010, Condition B, 10 cycles
- Burn-In at 100 ˚C baseplate temperature
- Final visual inspection per MIL-STD-883, Method 2009
- Full component traceability

Mechanical Features

- Industry standard half-brick pin-out configuration
- Size: 2.39″ x 2.49″ x 0.51" (60.6 x 63.1 x 13.0 mm)
- Weight: 4.8 oz (137 g)

Block Diagram

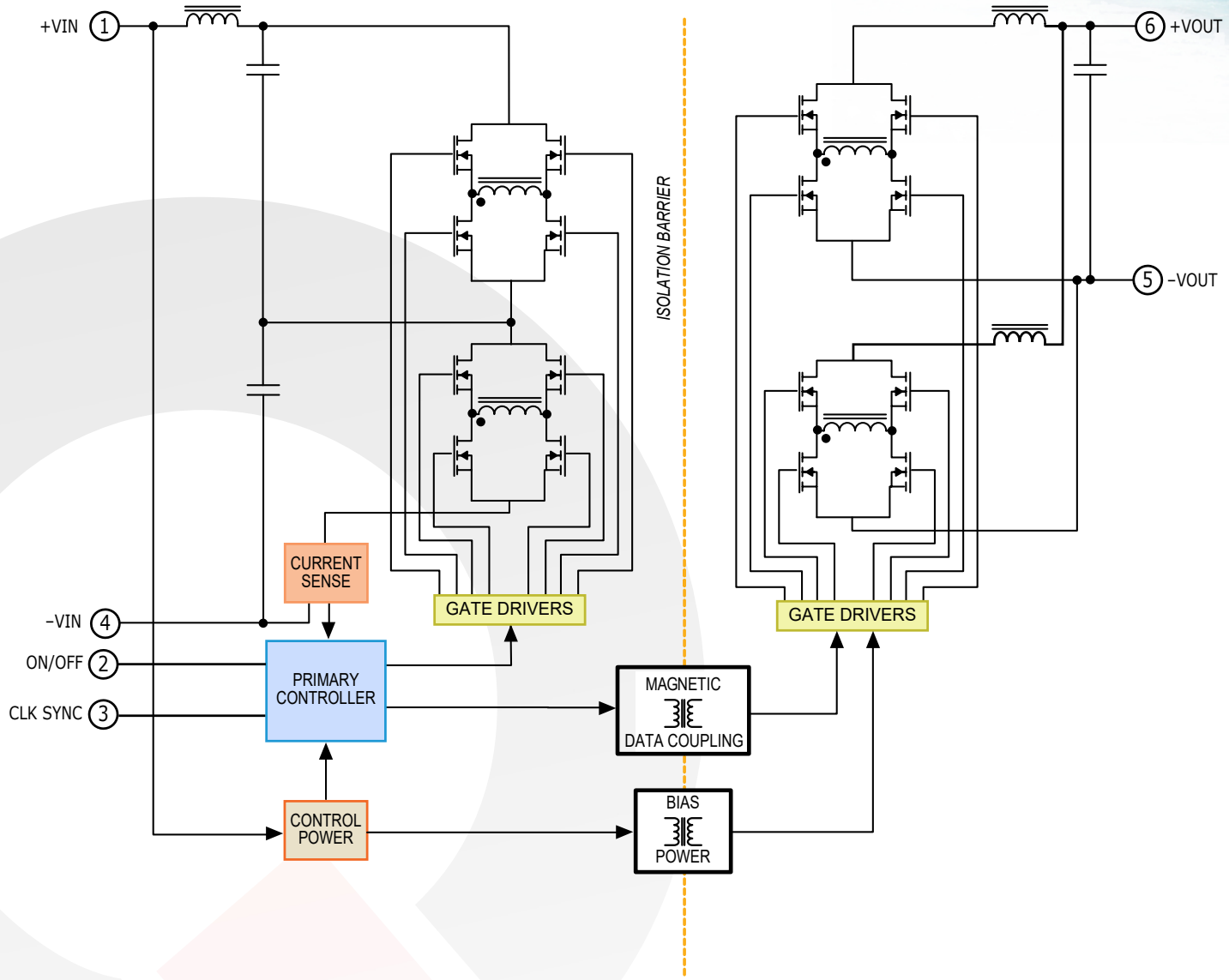

MCOTS-B-600-31-HT Electrical Characteristics

Ta = 25 °C, airflow rate = 300 LFM, Vin = 540 V dc unless otherwise noted; full operating temperature range is -55 °C to +100 °C baseplate temperature with appropriate power derating. Specifications subject to change without notice.

Parameter	Min.	Typ.	Max.	Units	Notes & Conditions
ABSOLUTE MAXIMUM RATINGS					
Input Voltage					
Non-Operating	-0.5		850	V	Continuous
Operating			790	V	See Note 1
Isolation Voltage					
Input to Output			4250	Vdc	
Input to Baseplate			2900	Vdc	
Output to Baseplate			2900	Vdc	
Operating Temperature	-55		100	°C	Baseplate temperature
Storage Temperature	-65		135	°C	
Voltage at ON/OFF input pin	-2		18	V	
INPUT CHARACTERISTICS					
Operating Input Voltage Range	440	540	700	V	Continuous
	400	540	750	V	Transient, 100 ms, dv/dt < 0.5 V/µs
Input Under-Voltage Lockout					
Turn-On Voltage Threshold		415		V	
Turn-Off Voltage Threshold		370		V	
Lockout Voltage Hysteresis		45		V	
Input Over-Voltage Shutdown				V	
Turn-On Voltage Threshold		725		V	
Turn-Off Voltage Threshold > 0.1 s		735		V	
Turn-Off Voltage Threshold		830		V	
Maximum Input Current			2.9	A	Vin = 440 V
No-Load Input Current		28		mA	
Disabled Input Current		3.0		mA	
Input Reflected-Ripple Current		130	200	mA	RMS through 10 µH inductor
Input Terminal-Ripple Current		250		mA	RMS, full load
Recommended Input Fuse			10	A	Fast blow external fuse recommended
Recommended External Input Capacitance		1		µF	Typical ESR 0.1-0.2 Ω
Input Filter Component Values (L\C)		2.3\0.30		µH\µF	Internal values
OUTPUT CHARACTERISTICS					
Output Voltage Set Point		30.3		V	Vin = 540 V; Io = 0 A
Output Voltage Regulation					
Over Line		51\15.9		%\V	
Over Load		1.9\600		%\mV	
Over Temperature		1\300		%\mV	
Total Output Voltage Range	24.5		40.4	V	Over sample, line, load, temperature & life
Output Voltage Ripple and Noise					20 MHz bandwidth; see Note 2
Peak-to-Peak		175	300	mV	Full load
RMS		33		mV	Full load
Operating Output Current Range	0		32.5	A	Subject to thermal derating; Vin = 540 V
Output DC Current-Limit Inception		38		A	Vin = 540 V
Output DC Current-Limit Shutdown Voltage		20		V	Vin = 540 V
Back-Drive Current Limit while Disabled		20		mA	Negative current drawn from output
Maximum Output Capacitance			2,000	µF	31 Vout at 16 A Resistive Load
EFFICIENCY					
100% Load		94.9		%	
50% Load		95.3		%	

MCOTS-B-600-31-HT Electrical Characteristics (continued)

Ta = 25 °C, airflow rate = 300 LFM, Vin = 540 V dc unless otherwise noted; full operating temperature range is -55 °C to +100 °C baseplate temperature with appropriate power derating. Specifications subject to change without notice.

Parameter	Min.	Typ.	Max.	Units	Notes & Conditions
DYNAMIC CHARACTERISTICS					
Output Voltage during Load Current Transient					
Step Change in Output Current (0.1 A/µs)		650		mV	50% to 75% to 50% Iout max
Settling Time		100		µs	To within 1% Vout nom
Turn-On Transient					
Turn-On Time (with 2 mF output capacitance)		20	30	ms	Half load (resistive), Vout=90% nom; Note 3
Start-Up Inhibit Time		250		ms	Figure F
Output Voltage Overshoot		0		%	2 mF load capacitance
ISOLATION CHARACTERISTICS					
Isolation Voltage (dielectric strength)			4250	V	See Absolute Maximum Ratings
Isolation Resistance		100		MΩ	
Isolation Capacitance (input to output)		N/A		pF	Note 4
TEMPERATURE MODEL FOR POWER DERATING CURVES					
Semiconductor Junction Temperature			125	°C	Package rated to 150 °C
Board Temperature			125	°C	UL rated max operating temp 130 °C
Transformer Core Temperature			125	°C	
Maximum Baseplate Temperature, Tb			100	°C	
FEATURE CHARACTERISTICS					
Switching Frequency (fs)	255	275	295	kHz	fundamental ripple frequency is 2 x fs
Clock Synchronization	500		600	kHz	Logic level high not to exceed 3.3 V
ON/OFF Control					
On-State Voltage	-1		0.8	V	
Off-State Voltage	2.4		18	V	
ON/OFF Control					Application notes Figure B
Pull-Up Voltage		5		V	
Pull-Up Resistance		82.5		kΩ	
Over-Temperature Shutdown OTP Trip Point	140		150	°C	Average PCB Temperature
Over-Temperature Shutdown Restart Hysteresis		10		°C	
RELIABILITY CHARACTERISTICS					
Calculated MTBF per MIL-HDBK-217F		1.63		10^6 Hrs.	Ground Benign, 70 °C Tb
Calculated MTBF per MIL-HDBK-217F		0.35		10^6 Hrs.	Ground Mobile, 70 °C Tb

Note 1: Converter will undergo input over-voltage shutdown.
Note 2: For applications requiring reduced output voltage ripple and noise, consult SynQor applications support (e-mail: support@synqor.com)
Note 3: Starting up under full load can result in hic-up operation (shut down).
Note 4: Isolation capacitance can be added external to the module (recommended).

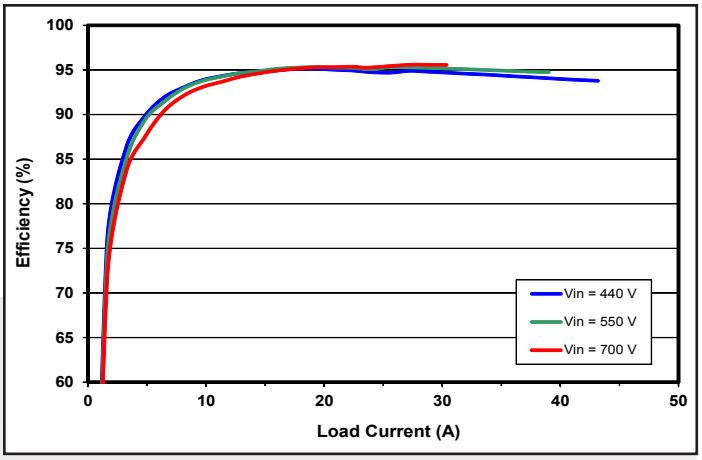

Figure 1: Efficiency at nominal output voltage vs. load current for minimum, nominal, and maximum input voltage at 25 °C.

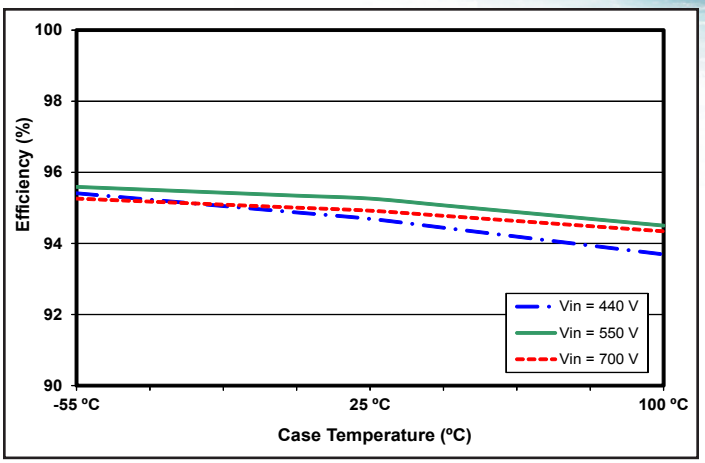

Figure 2: Efficiency vs. case temperature for minimum, nominal, and maximum input voltage and 60% rated power.

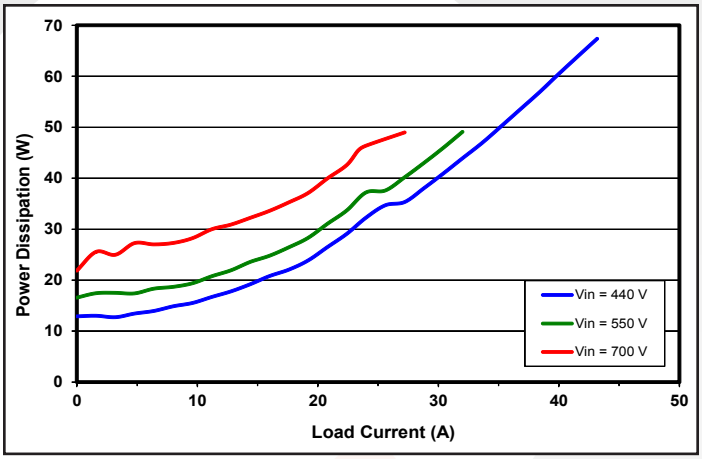

Figure 3: Power dissipation vs. load current for minimum, nominal, and maximum input voltage at T_{CASE}=25 °C.

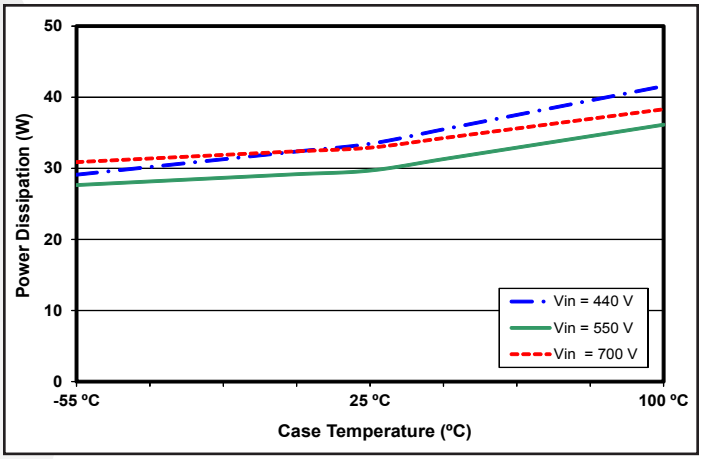

Figure 4: Power dissipation vs. case temperature for minimum, nominal, and maximum input voltage and 60% rated power.

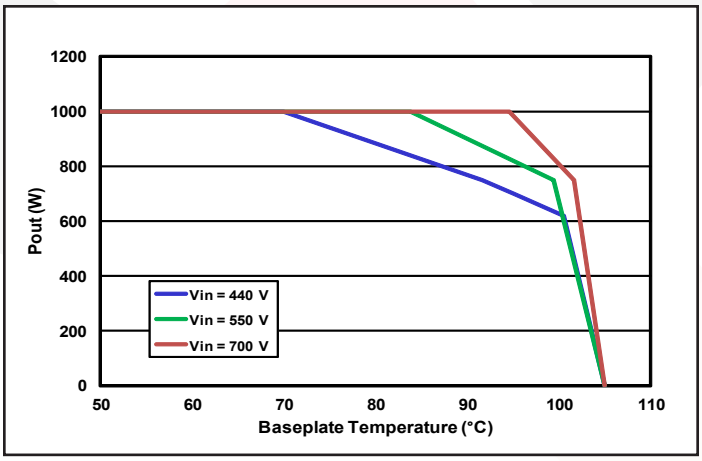

Figure 5: Maximum output power vs. baseplate temperature for minimum, nominal, and maximum input voltage.

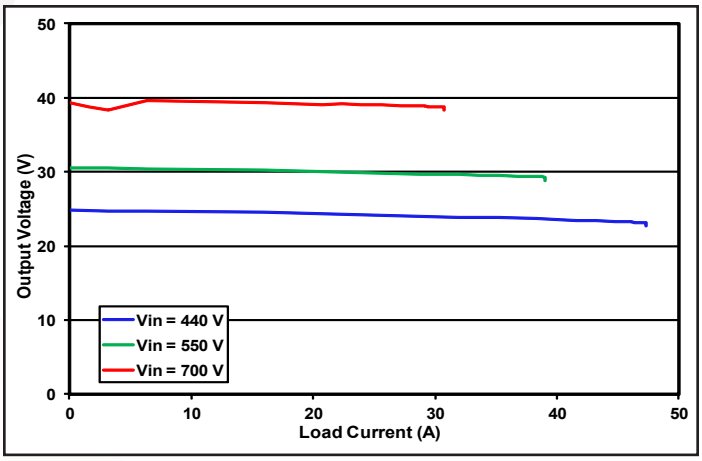

Figure 6: Output voltage vs. load current, current limit curves for minimum, nominal, and maximum input voltage at T_{CASE}=25 °C.

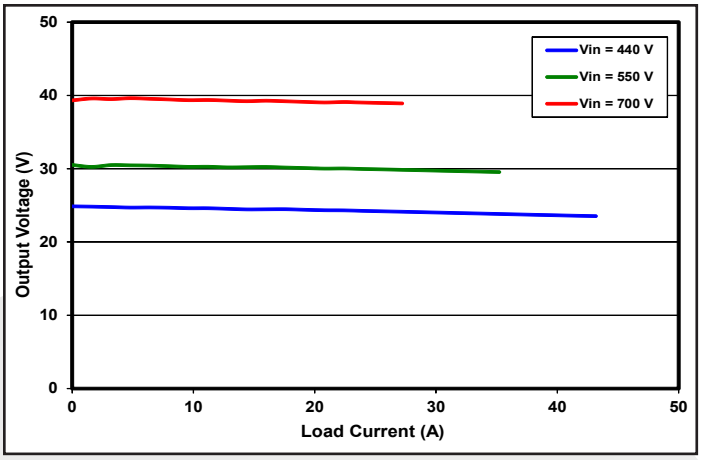

Figure 7: Output voltage vs. load current, regulation curves for minimum, nominal, and maximum input voltage at T_{CASE}=25 °C.

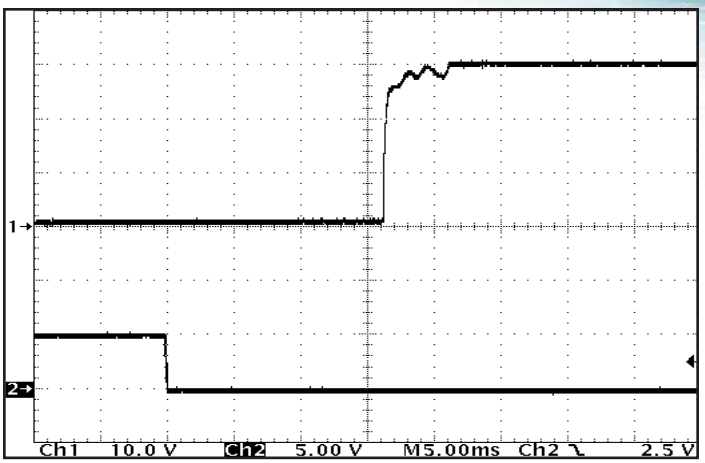

Figure 8: Turn-on transient at no load and zero output capacitance initiated by ENA. Input voltage pre-applied. Ch 1: Vout (10 V/div). Ch 2: ENA (5 V/div).

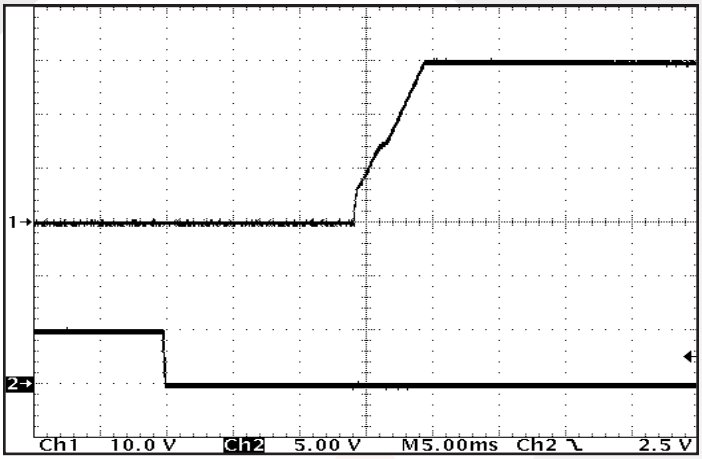

Figure 9: Turn-on transient at half resistive load and 100uF output capacitance initiated by ENA. Input voltage pre-applied. Ch 1: Vout (10 V/div). Ch 2: ENA (5 V/div).

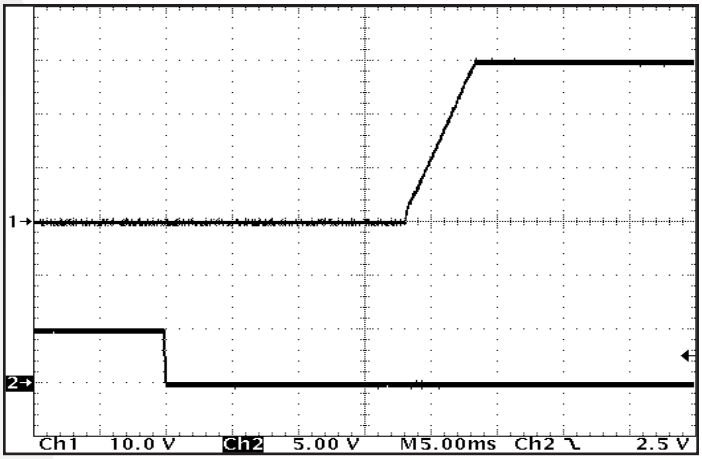

Figure 10: Turn-on transient at half resistive load and 2 mF output capacitance initiated by ENA. Input voltage pre-applied. Ch 1: Vout (10 V/div). Ch 2: ENA (5 V/div).

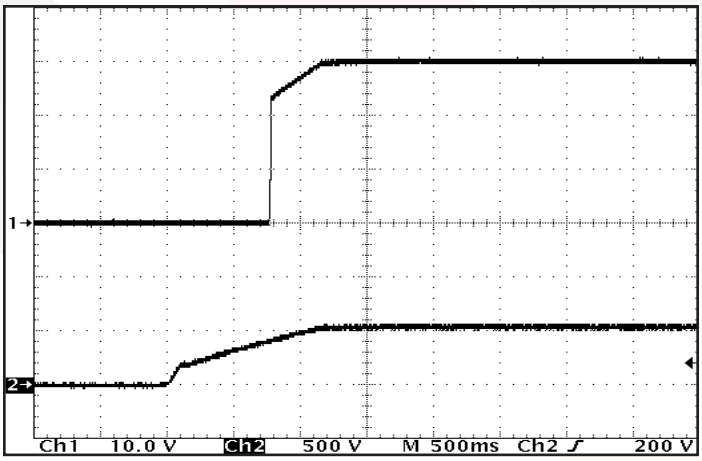

Figure 11: Turn-on transient at half resistive load and 100 uF output capacitance initiated by Vin. ENA previously high. Ch 1: Vout (10 V/div). Ch 2: Vin (500 V/div).

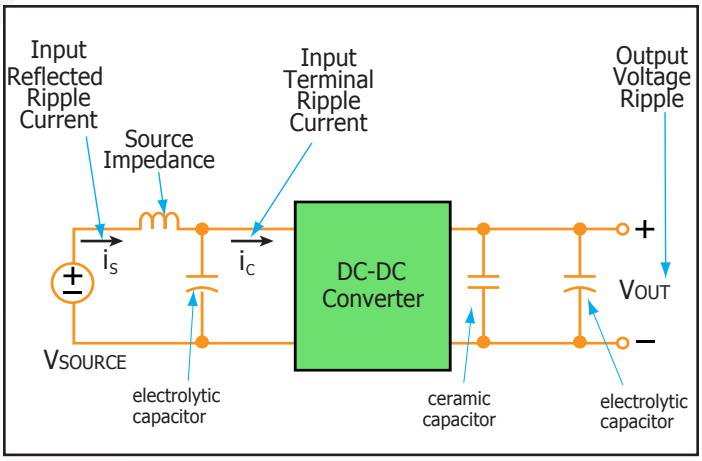

Figure 12: Test set-up diagram showing measurement points for Input Terminal Ripple Current (Figure 16) and Output Voltage Ripple (Figure 17).

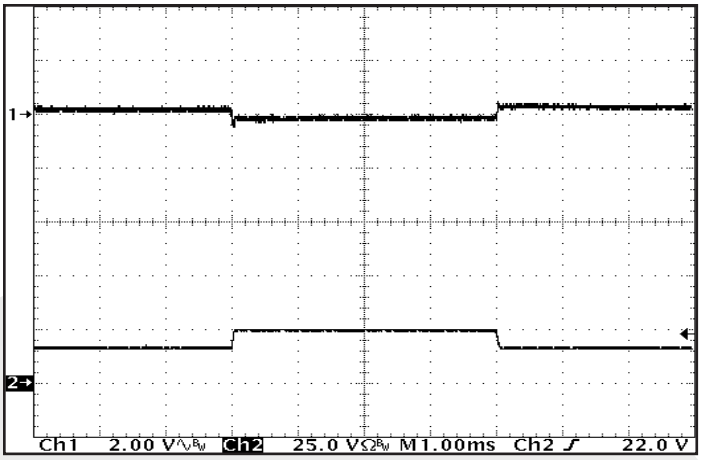

Figure 13: Output voltage response to step-change in load current 50%-75%-50% of Iout (max). Load capacitance: 1 uF ceramic and 10 uF 100 mΩ ESR tantalum. Ch1: Vout (2 V/div). Ch 2: Iout (25 A/div).

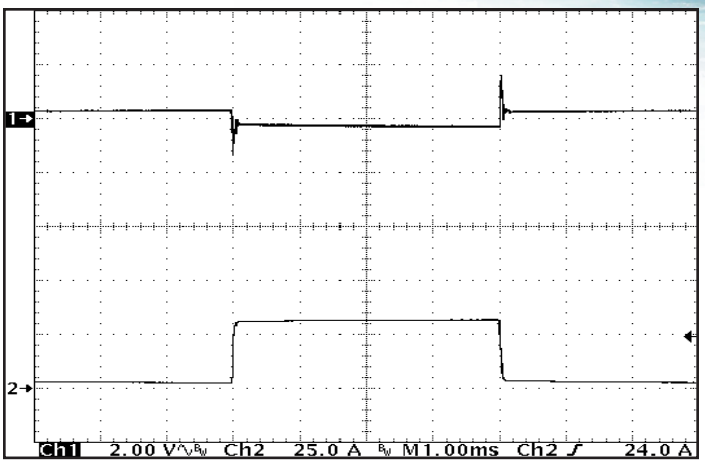

Figure 14: Output voltage response to step-change in load current 10%-100%-10% of Iout (max). Load capacitance: 1 uF ceramic and 10 uF 100 mΩ ESR tantalum. Ch1: Vout (2 V/div). Ch 2: Iout (25 A/div).

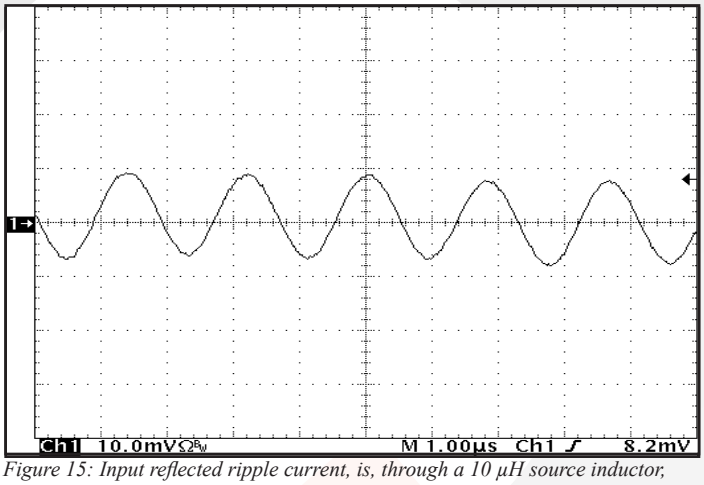

Figure 15: Input reflected ripple current, is, through a 10 µH source inductor, using a 1 uF ceramic input capacitor (50 mA/div). See Figure 12.

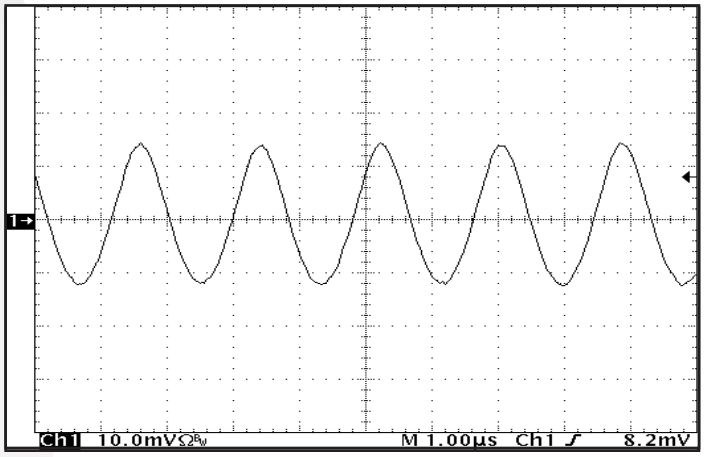

Figure 16: Input terminal ripple, ic, at full load and nominal input voltage with 10 µH source impedance and 1 µF ceramic capacitor (1 A/div). Bandwidth: 20 MHz. See Figure 12.

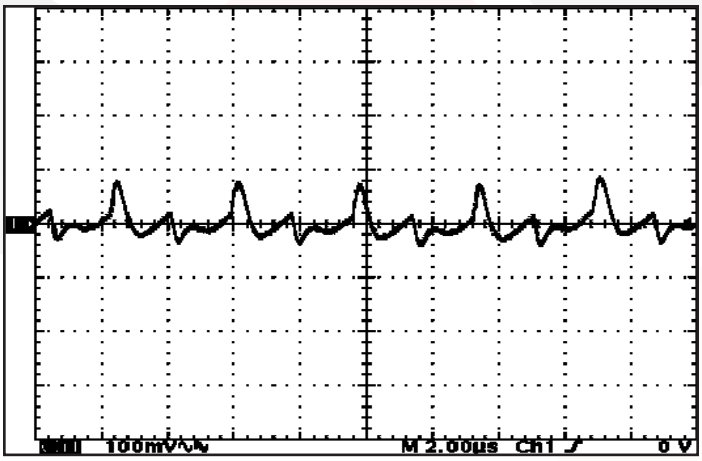

Figure 17: Output voltage ripple, Vout, at nominal input voltage and full load (100 mV/div). Bandwidth: 20 MHz. Load capacitance: 1 uF ceramic and 10 µF 100 mΩ ESR tantalum capacitor. See Figure 12.

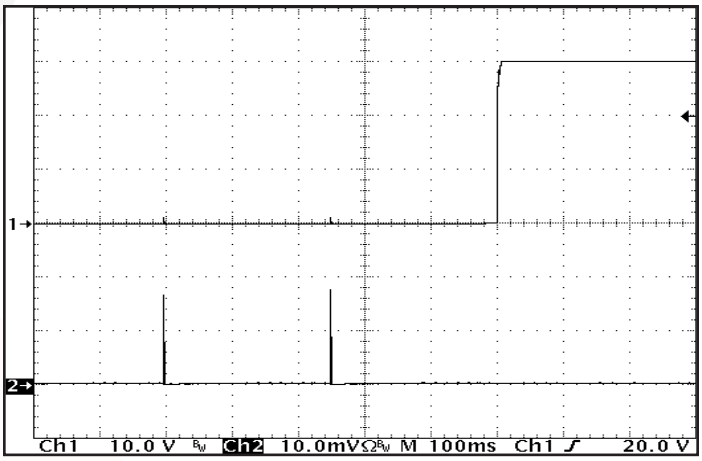

Figure 18: Rise of output voltage after the removal of a short circuit across the output terminals. Rshort = 5 mΩ. Ch1: Vout (10 V/div). Ch 2: Iout (50 A/div). Bandwidth: 20 MHz.

BASIC OPERATION AND FEATURES

With voltages dropping and currents rising, the economics of an Intermediate Bus Architecture (IBA) are becoming more attractive, especially in systems requiring multiple low voltages. IBA systems separate the role of isolation and voltage scaling from regulation and sensing. The BusQor series bus converter provides isolation and an unregulated voltage step down in one compact module, leaving regulation to simpler, less expensive non-isolated converters.

In Figure A below, the BusQor module provides the isolation stage of the IBA system. The isolated bus then distributes power to the non-isolated buck regulators to generate the required voltage levels at the points of load. In this case, the bucks are represented with SynQor's NiQor series of non-isolated DC-DC converters. In many applications requiring multiple low voltage outputs, significant savings can be achieved in board space and overall system costs.

When designing an IBA system with bus converters, the designer can select from a variety of bus voltages. While there is no universally ideal bus voltage, most designs employ one of the following: 31 V, 28 V, 24 V, 12 V, 9.6 V, or 6 V. Higher bus voltages can lead to lower efficiency for the buck regulators but are more efficient for the bus converter and provide lower board level distribution current. Lower bus voltages offer the opposite trade offs.

SynQor's BusQor modules act as a true dc transformer. The output voltage is proportional to the input voltage, with a specified "turns ratio" or voltage ratio, plus minor drop from the internal resistive losses in the module. When used in IBA systems, the output variation of the BusQor must be in accordance with the input voltage range of the non-isolated converters being employed.

The BusQor architecture is very scalable, meaning multiple bus converters can be connected directly in parallel to allow current sharing for higher power applications.

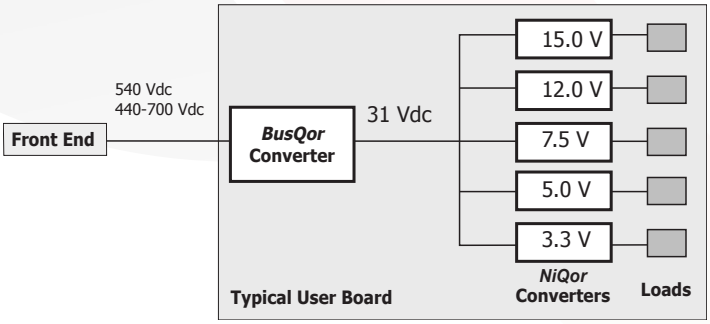

Figure A: Example of Intermediate Bus Architecture using isolated or non-isolated converters.

CONTROL FEATURES

REMOTE ON/OFF (Pin 2): The ON/OFF input, Pin 2, permits the user to control when the converter is on or off. This input is referenced to the return terminal of the input bus, Vin(-).

In the negative logic version, the ON/OFF signal is active low (meaning that a low turns the converter on). Figure B is a detailed look of the internal ON/OFF circuitry.

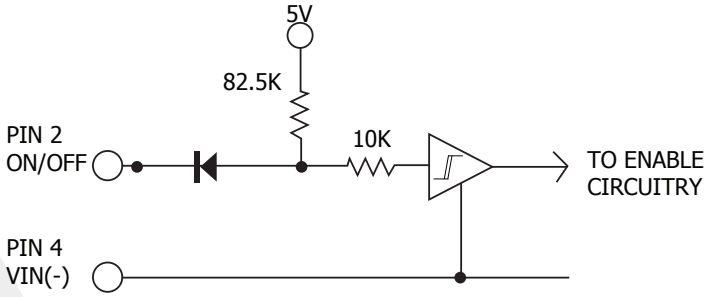

Figure B: Internal ON/OFF pin circuitry

SYNCHRONIZATION: The MCOTS converter's switching frequency can be synchronized to an external frequency source that is in the 500 kHz to 600 kHz range. A pulse train at the desired frequency should be applied to the CLK SYNC pin (pin 3) with respect to the Vin(-) (pin 4). This pulse train should have a duty cycle in the 20% to 80% range. Its low value should be below 0.8 V to be guaranteed to be interpreted as a logic low, and its high value should be above 2.0 V to be guaranteed to be interpreted as a logic high. The transition time between the two states should be less than 300 ns.

If the MCOTS converter is not to be synchronized, the CLK SYNC pin should be left open circuit. The converter will then operate in its free-running mode at a frequency of approximately 550 kHz (twice the switching frequency).

If, due to a fault, the CLK SYNC pin is held in either a logic low or logic high state continuously, or the CLK SYNC frequency is outside the 500-600 kHz range, the MCOTS converter will revert to its free-running frequency.

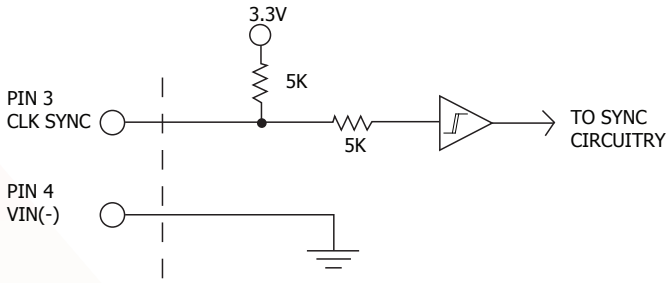

Figure C: Equivalent circuit looking into the CLK SYNC pin with respect to the Vin(-) pin.

PROTECTION FEATURES

Input Under-Voltage Lockout: The converter is designed to turn off when the input voltage is too low, helping avoid an input system instability problem, described in more detail in the application note titled "Input System Instability". The lockout circuitry is a comparator with DC hysteresis. When the input voltage is rising, it must exceed the typical Turn-On Voltage Threshold value (listed on the specification page) before the converter will turn on. Once the converter is on, the input voltage must fall below the typical Turn-Off Voltage Threshold value before the converter will turn off. Also see Figure F.

Input Over-Voltage Shutdown: The converter also has a two stage over-voltage feature that limits the converter's duty cycle for 100 ms before shutdown and a higher second level with no delay before shutdown if the input voltage is too high (See the Input Over-Voltage Shutdown section in the Electrical Characteristics Table for specific voltage levels). It also has a hysteresis and time delay to ensure proper operation.

Output Current Limit: The output of the BusQor module is electronically protected against output overloads. When an overload current greater than the "DC Current-Limit Inception" specification is drawn from the output, the output shuts down to zero volt in a period of 1 ms typical (see Figure D). The shutdown period lasts for a typical period of 250 ms (Figure E) after which the BusQor tries to power up again (10 ms). If the overload persists, the output voltage will go through repeated cycles of shutdown and restart with a duty cycle of 4% (On) and 96% (Off) respectively.

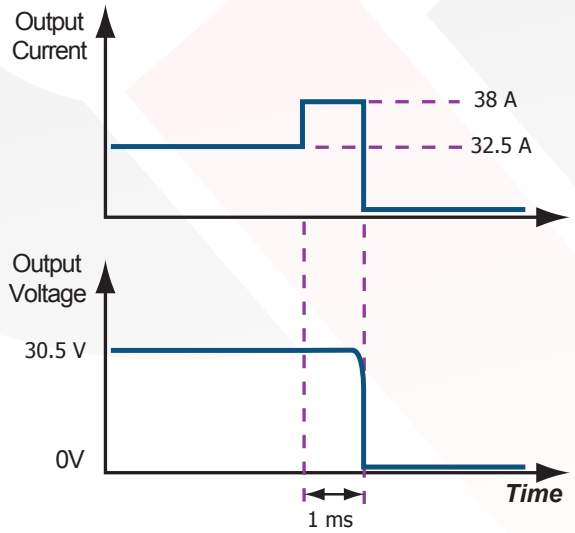

Figure D: Output Overload protection diagram (not to scale)

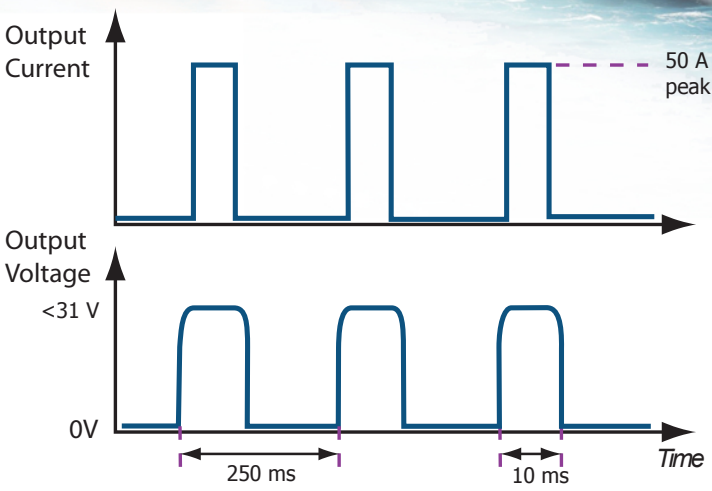

Figure E: Output Short Circuit and Auto-Resetting protection diagram (not to scale)

The BusQor module returns (auto resetting) to normal operation once the overload is removed. The BusQor is designed to survive in this mode indefinitely without damage and without human intervention.

Output Short Circuit Protection: When the output of the BusQor module is shorted, a peak current of typically 50 A will flow into the short circuit for a period not greater than 1 ms (typically 200 uS). The output of the BusQor will shutdown to zero for ~ 250 mS (Figure E). At the end of the shutdown period the BusQor module tries to power up again. If the short circuit persists, the output voltage will go through repeated cycles of shutdown and restart with a duty cycle of 4% (On) and 96% (Off) respectively. The BusQor module returns (auto resetting) to normal operation once the short circuit is removed. The BusQor is designed to survive in this mode indefinitely without damage and without human intervention.

In the Auto resetting mode, also referred to as "Hiccup" mode, the power drawn from the 540 V input is about ~10 Watts, most of which is dissipated into the external fault. It is important that copper traces and pads from the output circuit be designed to withstand the short term peaks, although the average current into the fault may be as low as 0.04 A typical. See Figure 18 for appropriate waveform.

Over-Temperature Shutdown: A temperature sensor on the converter senses the average temperature of the module. The thermal shutdown circuit is designed to turn the converter off when the temperature at the sensed location reaches the Over-Temperature Shutdown value. It will allow the converter to turn on again when the temperature of the sensed location falls by the amount of the Over-Temperature Shutdown Restart Hysteresis value.

APPLICATION CONSIDERATIONS

Start-Up Inhibit Period: Figure F details the Start-Up Inhibit Period for the BusQor module. At time t0, when Vin is applied with On/Off pin asserted (enabled), the BusQor output begins to build up. Before time t1, when the input voltage is below the UVL threshold, the unit is disabled by the Input Under-Voltage Lockout feature. When the input voltage rises above the UVL threshold, the Input Under-Voltage Lockout is released, and a typical Initial Startup Inhibit Period of 70 ms is initiated. The output builds up to 90% of the nominal value of 31.0 V in a period of 20 ms typical (50% load).

At time t2, when the On/Off pin is de-asserted (disabled), the BusQor output instantly drops to 0 V. Fall time from 31.0 V to 0 V is dependent on output capacitance and any parasitic trace inductance in the output load circuit.

At time t3, when the On/Off pin is re-asserted (enabled), the BusQor module output begins to build up after the inhibit period of 250 ms typical has elapsed.

Refer to the Control Features section of the data sheet for details on enabling and disabling methods for Bus Qor modules.

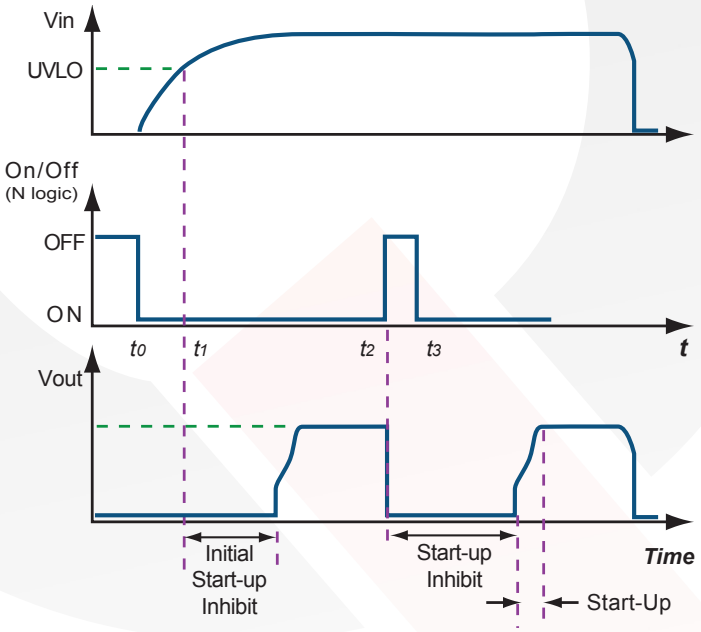

Figure F: Power Up/Down Diagram (not to scale) showing Start-Up Inhibit Period

Thermal Derating Test Setup

The curves showing the derating of output current and power as a function of the baseplate temperature are taken with the oven setup shown in Fig. G. The converter module is soldered to a carrier PCB that is mounted horizontally within an oven. The carrier PCB is a four layer 4 oz PCB. A large aluminum heatsink (thermal grease is applied between the baseplate and the heatsink interface to minimize the thermal impedance) is attached to the baseplate to keep the baseplate temperature constant during thermal testing. A small hole is drilled through the heatsink in order to attach a thermocouple to the baseplate of the DTU. Additional thermocouples are attached to the hottest components before baseplating to monitor the internal temperature of all of the critical components during testing. The oven temperature is controlled so as to keep the baseplate temperature to the desired value. The baseplate temperature is kept at 100 °C or below for all conditions. If the temperature of an internal component exceeds 125 °C, the output current (power level) is reduced so as to keep the temperature of all internal components below 125 °C.

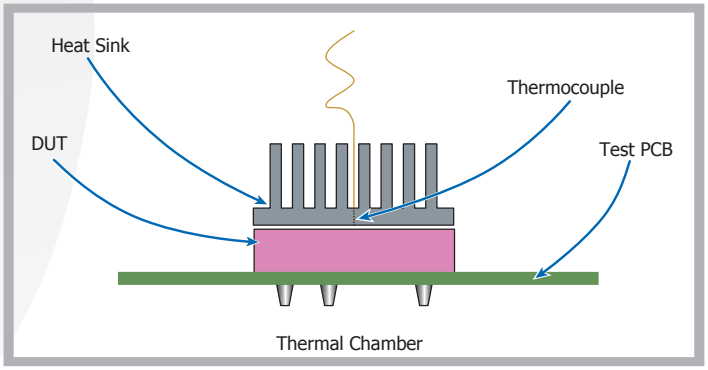

Figure G: Thermal chamber setup for derating curves.

Current Sharing: MCOTS BusQor modules are designed to operate in parallel without the use of any external current share circuitry. Current sharing is achieved through "Droop Share". An output capacitor is recommended across each module and located close to the converter for optimum filtering and noise control performance. Dedicated input inductors are recommended but are considered optional. Input capacitors must be located close to the converter module. PCB layout in the input circuit should be such that high frequency ripple currents of each module is restricted to a loop formed by the input capacitors and the input terminals of the BusQor module. See Figure H for details on PCB layout. Contact SynQor application engineering for further assistance on PCB trace design.

The current share performance of two paralleled modules is illustrated in the graph in Figure I. In this graph the percent deviation from ideal sharing (50%) is plotted for each module versus the total output load current at 540 Vin. Two MCOTS 600 Bus Qor's will share within 10% at higher loads. The current share accuracy is affected by changes in the gate drive timing. The gate drive timing is adjusted as a function of load to better optimize the product efficiency over line and load (performance), resulting in higher load share deviations at lighter loads.

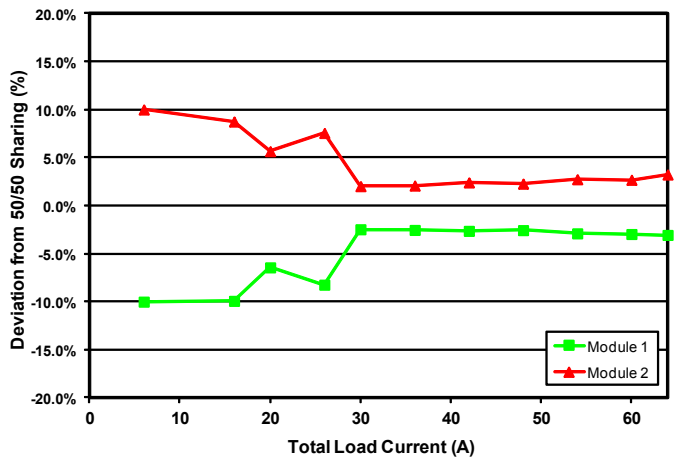

Figure I: Typical current share performance of 2 paralleled modules

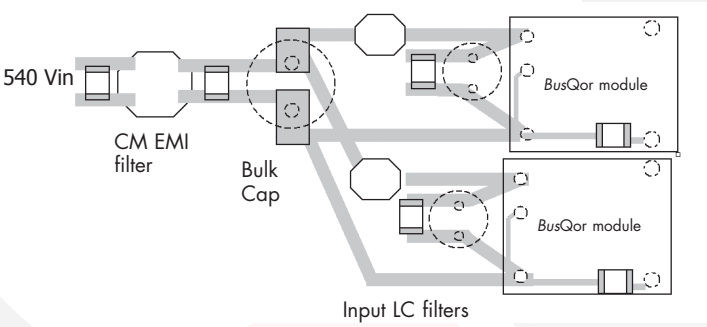

Figure H: Recommended physical implementation of two Bus Qor's in parallel.

Encased Mechanical Diagram

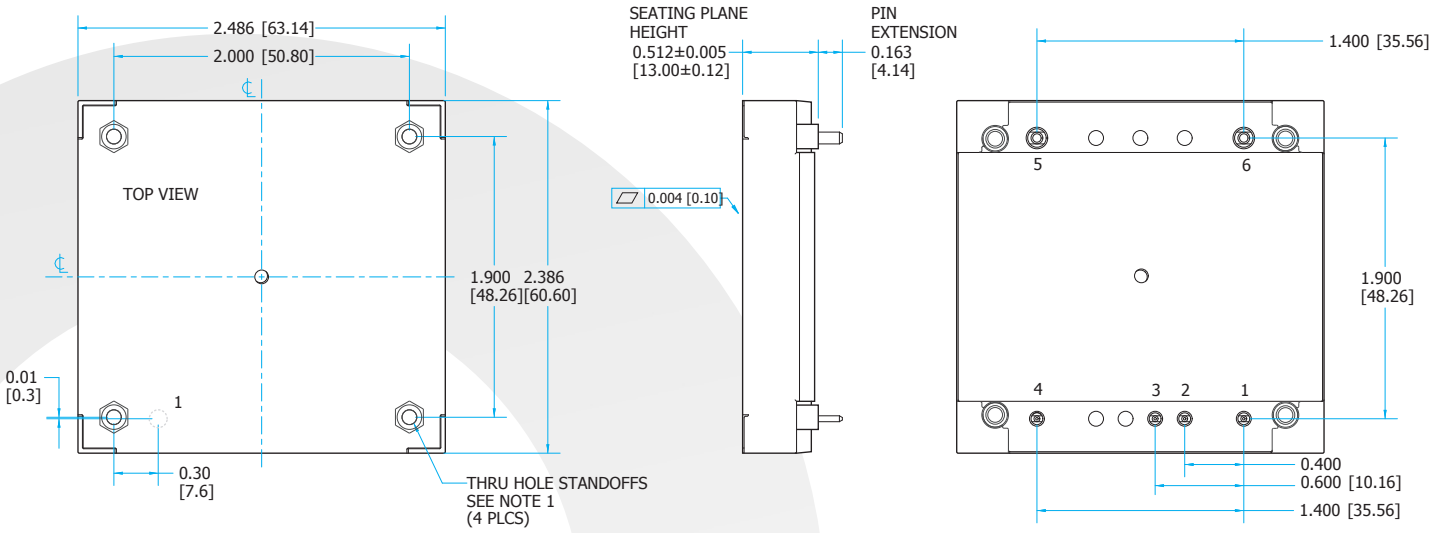

NOTES

1) APPLIED TORQUE PER M3 SCREW SHOULD NOT EXCEED 6 in-lb (0.7Nm).

   NONTHREADED: DIA 0.125" (3.18 mm)

2) BASEPLATE FLATNESS TOLERANCE IS 0.004" (.10 mm) TIR FOR SURFACE.

3) PINS 1-4 ARE 0.040" (1.02 mm) DIA. WITH 0.080" (2.03 mm) DIA. STANDOFFS.

4) PINS 5 AND 6 ARE 0.080" (2.03 mm) DIA. WITH 0.125" (3.18mm) DIA STANDOFFS

5) ALL PINS: MATERIAL: COPPER ALLOY
   FINISH: MATTE TIN OVER NICKEL PLATE

6) WEIGHT: 4.8 oz (137 g)

7) ALL DIMENSIONS IN INCHES(mm)
   TOLERANCES: X.XX IN +/-0.02 (X.X mm +/-0.5 mm)
   X.XXX IN +/-0.010 (X.XX mm +/-0.25 mm)

PIN DESIGNATIONS

Pin	Label	Name	Function
1	+VIN	Vin(+)	Positive input voltage
2	ON/OFF	ON/OFF	TTL input to turn converter on and off, referenced to Vin(–), with internal pull up.
3	CLK SYNC	Clock Sync	Clock synchronization
4	–VIN	Vin(-)	Negative input voltage
5	–VOUT	Vout(-)	Negative output voltage
6	+VOUT	Vout(+)	Positive output voltage

Flanged Encased Mechanical Diagram

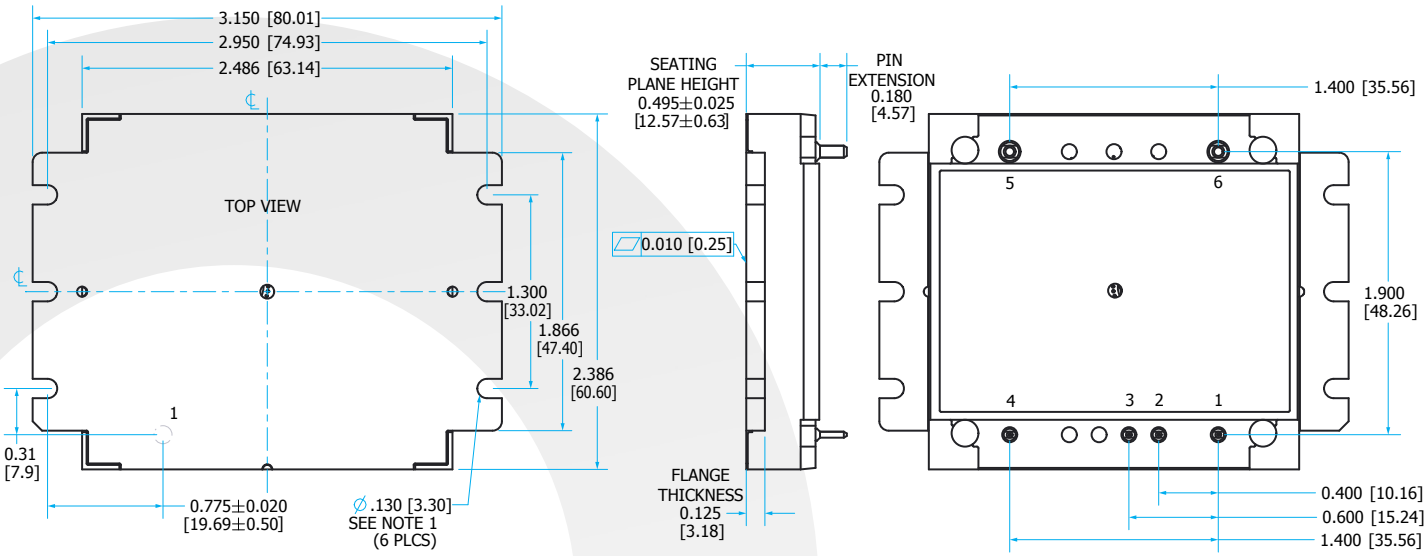

NOTES

1) APPLIED TORQUE PER M3 OR 4-40 SCREW SHOULD NOT EXCEED 6 in-lb (0.7Nm).
2) BASEPLATE FLATNESS TOLERANCE IS 0.01" (.25 mm) TIR FOR SURFACE.
3) PINS 1-4 ARE 0.040" (1.02 mm) DIA. WITH 0.080" (2.03 mm) DIA. STANDOFFS
4) PINS 5 AND 6 ARE 0.080" (2.03 mm) DIA. WITH 0.125" (3.18mm) DIA STANDOFFS
5) ALL PINS: MATERIAL: COPPER ALLOY
   FINISH: MATTE TIN OVER NICKEL PLATE
6) WEIGHT: 5.0 oz (143 g)
7) ALL DIMENSIONS IN INCHES(mm)
   TOLERANCES: X.XX IN +/-0.02 (X.X mm +/-0.5 mm)
   X.XXX IN +/-0.010 (X.XX mm +/-0.25 mm)

PIN DESIGNATIONS

Pin	Label	Name	Function
1	+VIN	Vin(+)	Positive input voltage
2	ON/OFF	ON/OFF	TTL input to turn converter on and off, referenced to Vin(–), with internal pull up.
3	CLK SYNC	Clock Sync	Clock synchronization
4	–VIN	Vin(-)	Negative input voltage
5	–VOUT	Vout(-)	Negative output voltage
6	+VOUT	Vout(+)	Positive output voltage

Mil-COTS Qualification

Test Name	Details	# Tested (# Failed)	Consistent with MIL-STD-883F Method
Life Testing	Visual, mechanical and electrical testing before, during and after 1000 hour burn-in @ full load	15 (0)	Method 1005.8
Shock-Vibration	Visual, mechanical and electrical testing before, during and after shock and vibration tests	5 (0)	MIL-STD-202, Methods 201A & 213B
Humidity	+85 °C, 95% RH, 1000 hours, 2 minutes on / 6 hours off	8 (0)	Method 1004.7
Temperature Cycling	500 cycles of -55 °C to +100 °C (30 minute dwell at each temperature)	10 (0)	Method 1010.8, Condition A
Solderability	15 pins	15 (0)	Method 2003
DMT	-65 °C to +110 °C across full line and load specifications in 5 °C steps	7 (0)	
Altitude	70,000 feet (21 km), see Note	2 (0)	

Note: A conductive cooling design is generally needed for high altitude applications because of naturally poor convective cooling at rare atmospheres.

Mil-COTS Converter and Filter Screening

Screening	Process Description	S-Grade	M-Grade
Baseplate Operating Temperature		-55 °C to +100 °C	-55 °C to +100 °C
Storage Temperature		-65 °C to +135 °C	-65 °C to +135 °C
Pre-Cap Inspection	IPC-A-610, Class III	•	•
Temperature Cycling	MIL-STD-883F, Method 1010, Condition B, 10 Cycles		•
Burn-In	100 °C Baseplate	12 Hours	96 Hours
Final Electrical Test	100%	25 °C	-55 °C, +25 °C, +100 °C
Final Visual Inspection	MIL-STD-883F, Method 2009	•	•

Mil-COTS MIL-STD-810G Qualification Testing

MIL-STD-810G Test	Method	Description
Fungus	508.6	Table 508.6-I
Altitude	500.5 - Procedure I	Storage: 70,000 ft / 2 hr duration
	500.5 - Procedure II	Operating: 70,000 ft / 2 hr duration; Ambient Temperature
Rapid Decompression	500.5 - Procedure III	Storage: 8,000 ft to 40,000 ft
Acceleration	513.6 - Procedure II	Operating: 15 g
Salt Fog	509.5	Storage
High Temperature	501.5 - Procedure I	Storage: 135 °C / 3 hrs
	501.5 - Procedure II	Operating: 100 °C / 3 hrs
Low Temperature	502.5 - Procedure I	Storage: -65 °C / 4 hrs
	502.5 - Procedure II	Operating: -55 °C / 3 hrs
Temperature Shock	503.5 - Procedure I - C	Storage: -65 °C to 135 °C; 12 cycles
Rain	506.5 - Procedure I	Wind Blown Rain
Immersion	512.5 - Procedure I	Non-Operating
Humidity	507.5 - Procedure II	Aggravated cycle @ 95% RH (Figure 507.5-7 aggravated temp - humidity cycle, 15 cycles)
Random Vibration	514.6 - Procedure I	10 - 2000 Hz, PSD level of 1.5 g^2/Hz (54.6 g_{rms}), duration = 1 hr/axis
Shock	516.6 - Procedure I	20 g peak, 11 ms, Functional Shock (Operating no load) (saw tooth)
	516.6 - Procedure VI	Bench Handling Shock
Sinusoidal vibration	514.6 - Category 14	Rotary wing aircraft - helicopter, 4 hrs/axis, 20 g (sine sweep from 10 - 500 Hz)
Sand and Dust	510.5 - Procedure I	Blowing Dust
	510.5 - Procedure II	Blowing Sand

Ordering Section

Ordering Information/ Part Numbering

Example: MCOTS-B-600-31-HT

Not all combinations make valid part numbers, please contact SynQor for availability. See product summary page for details.

Family	Product	Input Voltage	Output Voltage	Package	Thermal Design	Screening Level	Options
MCOTS	**B:** Bus Converter	**600:** 440-700V	**31:** 31V	**HT:** Half Brick Tera	**N:** Normal Threaded **D:** Normal Non-Threaded **F:** Flanged	**S:** S-Grade **M:** M-Grade	**[ ]:** Standard Feature

Application Notes

A variety of application notes and technical white papers can be downloaded in pdf format from our website.

Contact SynQor for further information and to order:

Phone: 978-849-0600 **Fax:** 978-849-0602
E-mail: power@synqor.com **Web:** www.synqor.com
Address: 155 Swanson Road, Boxborough, MA 01719 USA

WARRANTY

SynQor offers a two (2) year limited warranty. Complete warranty information is listed on our website or is available upon request from SynQor.

PATENTS

SynQor holds numerous U.S. patents, one or more of which apply to most of its power conversion products. Any that apply to the product(s) listed in this document are identified by markings on the product(s) or on internal components of the product(s) in accordance with U.S. patent laws. SynQor's patents include the following:

7,765,687 7,787,261
8,149,597 8,644,027